DWG.No.V100-60-02

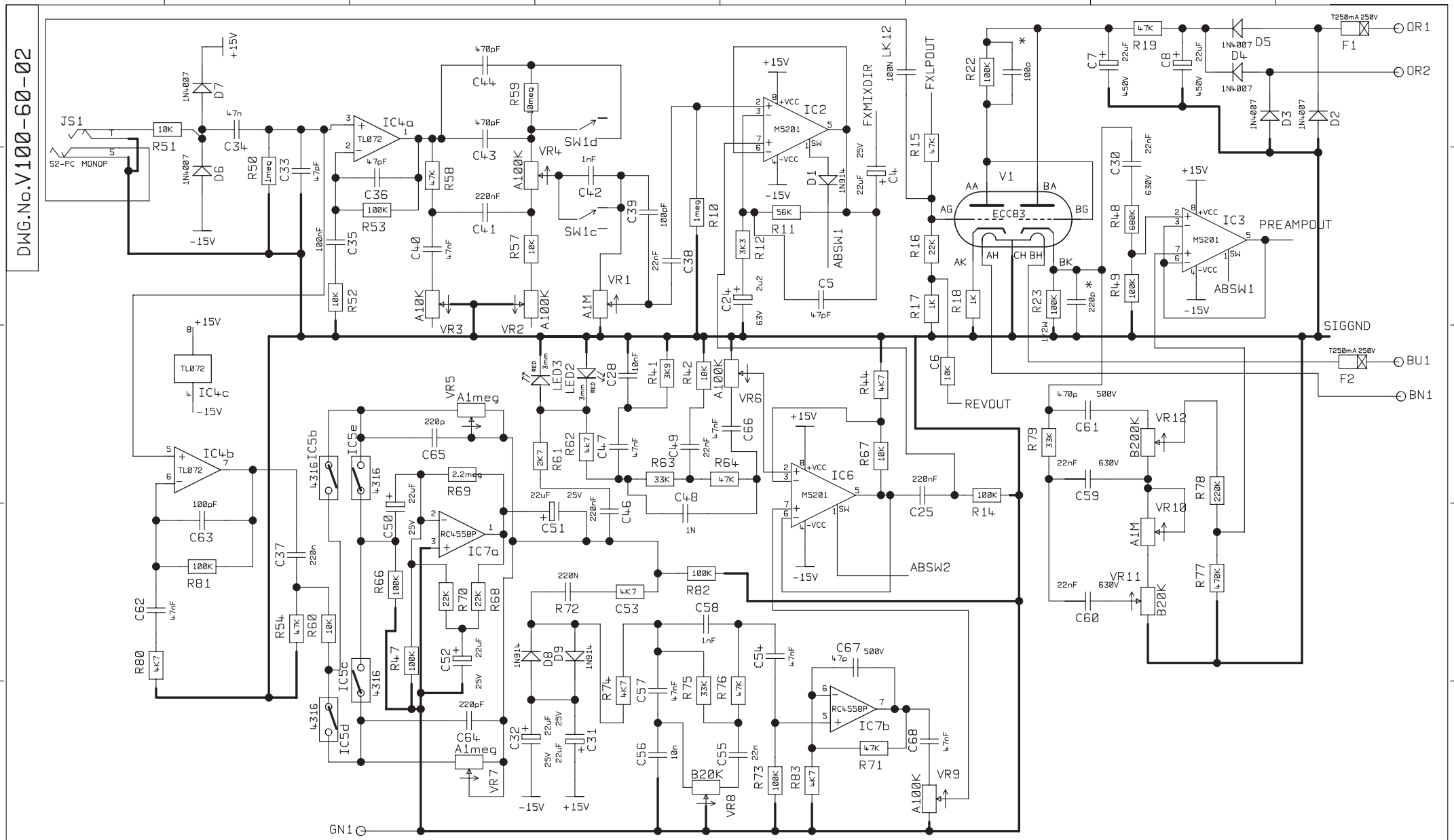

* CAPACITORS FITTED ON EUROPEAN UNITS ONLY. REF CONCESSION 1112

COMPONENTS C67 AND R41 NOT FITTED.

ISS	ECO NUMBER	DATE
3	1164	26-04-96
2	1110	13-2-96

ALL OTHER HOLES = X = (THROUGH PLATED)

A			E			J			N		
B			F			K			P		
C			G			L			Q		
D			H			M			R		

MATERIAL
MATERIAL THICKNESS
DRAWN SG DATE 17_11_95
CHECKED DATE
APPROVED DATE

DIMENSIONS IN
TOLERANCE (UNLESS UTHERWISE STATED)
MODEL VS100

Marshall
© MARSHALL AMPLIFICATION PLC
DENBIGH ROAD, BLETCHLEY, MILTON KEYNES, MK1 1DQ.
TEL (01908) 375411 FAX (01908) 376118

TITLE PRE AMP PCB SHT 1 OF 2
DWG.No V100-60-02 ISS 3