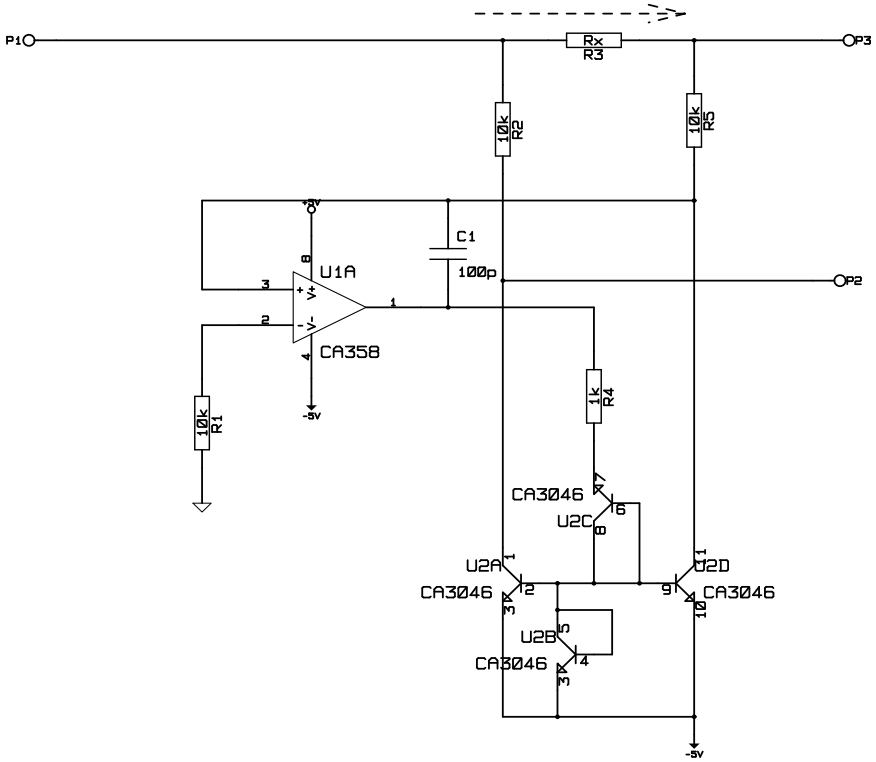

Title:		
Size: A4	Date: 29 jul 2008	Rev:
KiCad E.D.A.		Sheet: 1/1